CAMBRIDGE
International Education

Cambridge IGCSE™ (9–1)

PHYSICS **0972/21**

Paper 2 Multiple Choice (Extended) **May/June 2026**

45 minutes

You must answer on the multiple choice answer sheet.

You will need: Multiple choice answer sheet
Soft clean eraser
Soft pencil (type B or HB is recommended)

INSTRUCTIONS

- There are **forty** questions on this paper. Answer **all** questions.
- For each question there are four possible answers **A**, **B**, **C** and **D**. Choose the **one** you consider correct and record your choice in soft pencil on the multiple choice answer sheet.
- Follow the instructions on the multiple choice answer sheet.
- Write in soft pencil.
- Write your name, centre number and candidate number on the multiple choice answer sheet in the spaces provided unless this has been done for you.
- Do **not** use correction fluid or tape.
- Do **not** write on any bar codes.
- You may use a calculator.
- Take the weight of 1.0 kg to be 9.8 N (acceleration of free fall = 9.8 m / s^2).

INFORMATION

- The total mark for this paper is 40.
- Each correct answer will score one mark.
- Any rough working should be done on this question paper.

This document has **16** pages. Any blank pages are indicated.

IB26 06_0972_21/FP
© Cambridge University Press & Assessment 2026

[Turn over

1 A ball rolls down a slope.

Which equipment is used to measure the time this takes?

A a thermometer

B a diverging lens

C a protractor

D a stopwatch

2 An object moves in a straight line.

The energy in the kinetic store of the moving object is 90 J.

The momentum of the object is 60 kg m / s.

Which quantities are vector quantities and what is the mass of the object?

	vector quantities	mass / kg
A	energy and mass	20
B	energy and mass	30
C	momentum	20
D	momentum	30

3 A car is travelling at a velocity of 2.0 m / s.

The car accelerates at a constant 0.20 m / s^2 for a time of 2.5 minutes.

What is the final velocity of the car?

A 2.5 m / s **B** 5.2 m / s **C** 30 m / s **D** 32 m / s

4 The gravitational field strength at the surface of the Earth varies slightly from place to place.

At the South Pole it is 9.86 N / kg and in London it is 9.81 N / kg.

An explorer collects a rock at the South Pole and moves it to London.

How does moving the rock from the South Pole to London affect the mass and the weight of the rock?

	effect on mass	effect on weight
A	none	decreases
B	none	none
C	decreases	decreases
D	decreases	none

© Cambridge University Press & Assessment 2026

PapaCambridge · papacambridge.com 0972/21 Question Paper June 2026

5 The diagram shows a bird in flight. The bird is flying in a horizontal direction to the right.

In which direction does air resistance act on the bird?

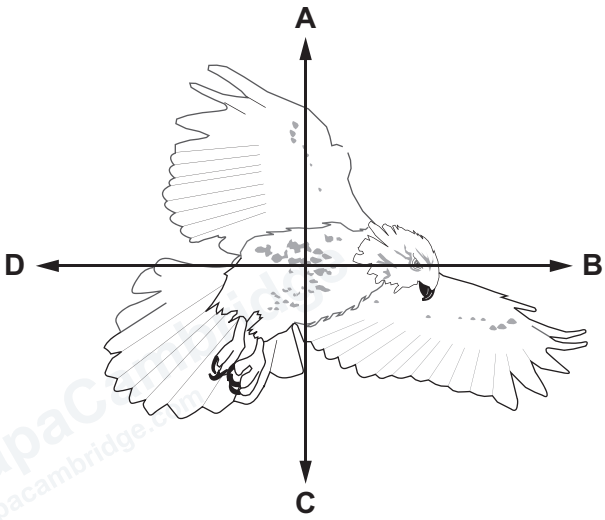

6 The diagram shows a uniform metre ruler of weight Q.

Two additional weights, P and R, act on the metre ruler. The ruler is balanced horizontally.

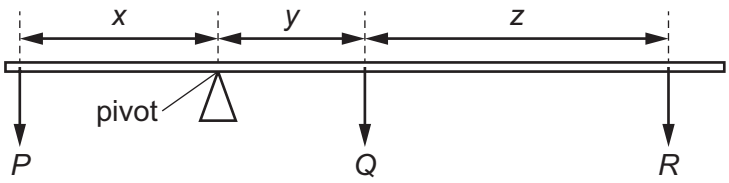

Which equation is correct?

A $Px = Qy + R(z + y)$

B $Px = Qy + Rz$

C $Px + Qy + Rz = 0$

D $P = Q + R$

7 A mass of 4.0 kg is travelling at a velocity of 6.0 m / s.

A force acts on the mass and its velocity increases to 20 m / s.

Which impulse produces this change?

A 3.5 N s **B** 6.5 N s **C** 56 N s **D** 80 N s

© Cambridge University Press & Assessment 2026

PapaCambridge · papacambridge.com 0972/21 Question Paper June 2026

8 Which pair of energy resources is derived from the process of nuclear fusion in the Sun?

A fossil fuels and tidal

B geothermal and nuclear fuel

C nuclear fuel and tidal

D fossil fuels and waves

9 An object is beneath the surface of a liquid. One factor that affects the pressure exerted on the object is the gravitational field strength.

Which other factors affect the pressure due to the liquid?

A the depth of the liquid and the density of the liquid only

B the mass of the object and the density of the liquid only

C the mass of the object and the depth of the liquid only

D the mass of the object, the depth of the liquid and the density of the liquid

10 Which row describes the arrangement and the average separation of gas particles?

	arrangement of gas particles	**average separation of gas particles**
A	in fixed positions	less than in solids
B	in fixed positions	greater than in solids
C	in variable positions	less than in solids
D	in variable positions	greater than in solids

© Cambridge University Press & Assessment 2026

PapaCambridge · papacambridge.com

11 The same mass of a gas is trapped in four identical cylinders by a piston that can move.

The diagrams show the samples of gas in different conditions of volume and temperature.

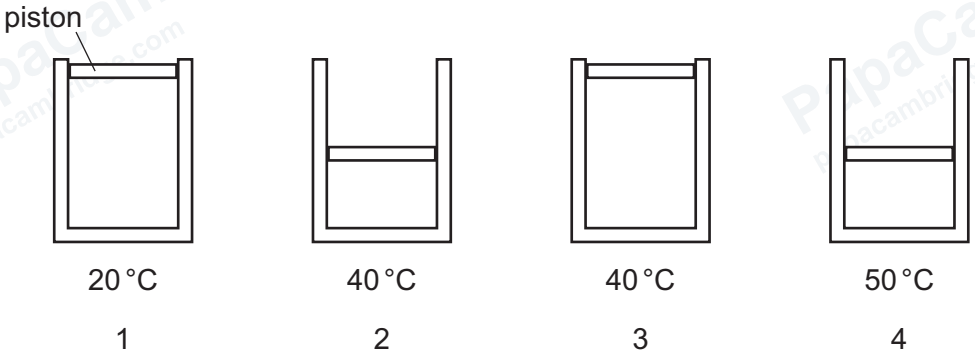

Which list gives the pressure of the gas in order from lowest to highest?

A $1 \rightarrow 2 \rightarrow 3 \rightarrow 4$

B $1 \rightarrow 3 \rightarrow 2 \rightarrow 4$

C $4 \rightarrow 2 \rightarrow 3 \rightarrow 1$

D $4 \rightarrow 3 \rightarrow 2 \rightarrow 1$

12 A fixed mass of gas has a volume V_1 at pressure p_1.

Which expression gives the final pressure p_2 of the gas when it is compressed to a new volume V_2 at a constant temperature?

A $\frac{p_1V_2}{V_1}$ **B** $\frac{p_1V_1}{V_2}$ **C** $\frac{V_1V_2}{p_1}$ **D** $\frac{p_1}{V_1V_2}$

13 The temperature of a copper block increases.

Which energy store in the block must increase?

A internal

B elastic

C gravitational potential

D chemical

© Cambridge University Press & Assessment 2026

PapaCambridge · papacambridge.com 0972/21 Question Paper June 2026

14 On a cold day, a shiny metal rod feels colder to the touch than a black plastic rod.

Which statement explains this observation?

A The metal rod is a better absorber of infrared radiation than the plastic rod.

B The metal rod is a better thermal conductor than the plastic rod.

C The metal rod is a worse absorber of infrared radiation than the plastic rod.

D The metal rod is a worse thermal conductor than the plastic rod.

15 The diagram shows a coal fire heating a room.

The arrows X, Y and Z represent three methods of thermal energy transfer.

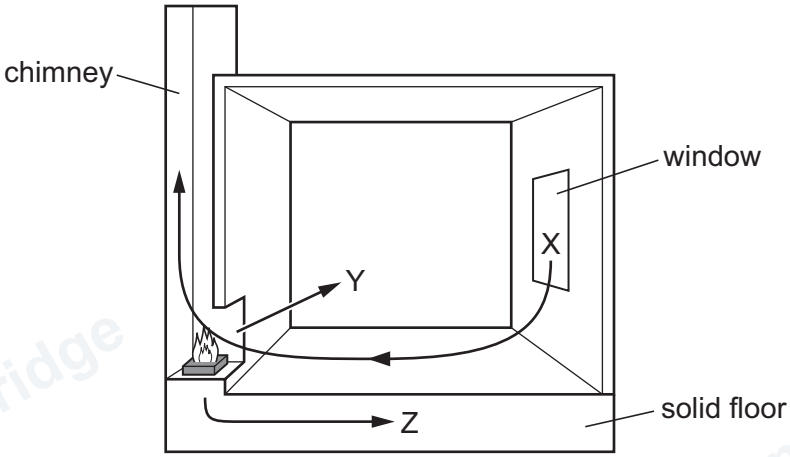

Which row matches a description of a method of thermal energy transfer to the arrow in the diagram representing this transfer?

	results from changes in density	**relies upon molecular lattice vibrations**
A	X	Z
B	X	Y
C	Y	X
D	Z	X

16 Which thermal process can transfer energy through a vacuum?

A conduction

B convection

C evaporation

D radiation

© Cambridge University Press & Assessment 2026

PapaCambridge · papacambridge.com

17 Two students stand facing each other at position P and at position Q. The students hold the ends of a piece of rope.

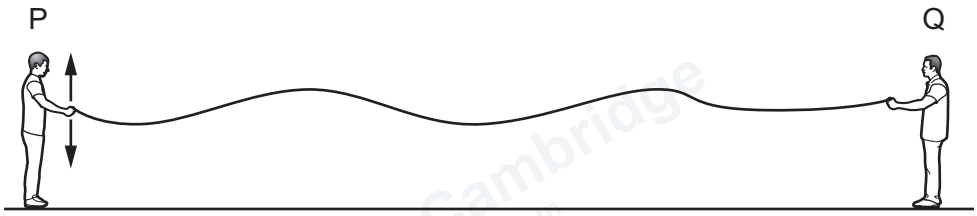

The student at P moves one end of the rope up and down to send a wave along the rope towards the student at Q.

Which row shows what is transferred from P to Q by the wave and what is **not** transferred from P to Q by the wave?

	what is transferred from P to Q	**what is not transferred from P to Q**
A	energy and particles in the rope	wave peaks and troughs
B	energy	particles in the rope
C	particles in the rope	energy and wave peaks and troughs
D	particles in the rope and wave peaks and troughs	energy

18 When a person speaks, sound waves leave through the person's mouth and spread out in many directions.

Which row states the physical process that causes the sound waves to spread out and the reason why this happens as the sound waves leave an open mouth?

	process	**reason**
A	diffraction	sound wavelengths are small compared to the size of the mouth
B	diffraction	sound wavelengths are large compared to the size of the mouth
C	refraction	sound wavelengths are small compared to the size of the mouth
D	refraction	sound wavelengths are large compared to the size of the mouth

© Cambridge University Press & Assessment 2026

PapaCambridge · papacambridge.com 0972/21 Question Paper June 2026

19 A ray of light travels in air.

The ray strikes a glass block. The angle between the ray and the block is 60°.

The speed of light in air is 3.0×10^8 m/s.

The speed of light in glass is 2.0×10^8 m/s.

What is the angle of refraction in the glass block?

A 19° **B** 35° **C** 40° **D** 75°

20 The diagram shows two rays of light from the same point on an object passing through a thin converging lens.

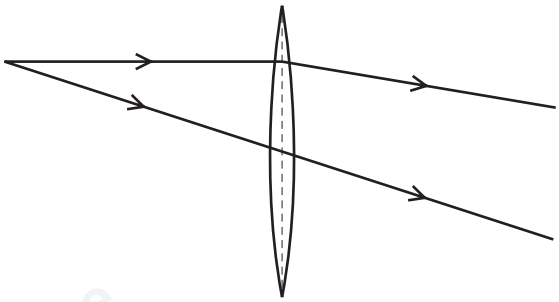

Which statement describes the image of the object?

A It is real and inverted on the left side of the lens.

B It is real and upright on the right side of the lens.

C It is virtual and inverted on the right side of the lens.

D It is virtual and upright on the left side of the lens.

21 Three statements about red light are listed.

1 Red light is one of the traditional seven colours that make up the visible spectrum.

2 Red light has the highest frequency in the visible spectrum.

3 Red light has the longest wavelength in the visible spectrum.

Which statements are correct?

A 1, 2 and 3 **B** 1 and 2 only **C** 1 and 3 only **D** 2 and 3 only

© Cambridge University Press & Assessment 2026

PapaCambridge · papacambridge.com

22 Two rays of light are different colours.

Which row is correct?

	speeds of the two colours in a vacuum	wavelengths of the two colours in a vacuum
A	different	different
B	different	the same
C	the same	different
D	the same	the same

23 A person is speaking. The sound the person makes can be transmitted as a signal rather than as a longitudinal wave.

Which statement about the transmission of the sound as a signal is correct?

A The sound is originally analogue but can be transmitted as a digital signal.

B The sound is originally digital but can be transmitted as an analogue signal.

C The sound is originally analogue and can only be transmitted as an analogue signal.

D The sound is originally digital and can only be transmitted as a digital signal.

24 Which value is closest to the speed of sound in air?

A 30 m / s

B 300 m / s

C 300 000 m / s

D 300 000 000 m / s

25 What is meant by induced magnetism?

A the force of attraction between the N pole of one magnet and the S pole of a different magnet

B the force of repulsion between the N poles of two magnets

C when a material placed in a magnetic field becomes a permanent magnet

D when a material placed in a magnetic field becomes a temporary magnet

© Cambridge University Press & Assessment 2026

PapaCambridge · papacambridge.com 0972/21 Question Paper June 2026

26 A magnetic field does **not** exert a force on a stationary electric charge.

A magnetic field exerts a force on a moving electric charge.

Which statement explains this?

A A moving charge has an electric field.

B A moving charge has a gravitational field.

C A moving charge has a magnetic field.

D A moving charge has kinetic energy.

27 A smoke detector is connected to a 9.0 V cell. The cell transfers energy at a rate of 1.0×10^{-4} W.

How much charge passes through the smoke detector in one day?

A 0.040 C **B** 0.96 C **C** 78 C **D** 7.8×10^{9} C

28 A student connects a resistor of resistance R in parallel with a cell of electromotive force (e.m.f.) V.

Which calculation gives the current I in the resistor?

A $\frac{R}{V}$ **B** $R \times V$ **C** $\frac{V}{R}$ **D** $V + R$

29 A light-emitting diode (LED) is connected to a battery and glows.

The LED is then connected to the battery the other way round.

Which statement is correct?

A The LED will **not** glow.

B The LED will still glow but less brightly.

C The LED will glow more brightly.

D The current in the LED will be too large.

© Cambridge University Press & Assessment 2026

PapaCambridge · papacambridge.com 0972/21 Question Paper June 2026

30 The diagram shows a battery connected to four resistors.

The resistances of the resistors are as labelled.

At which point in the circuit is the current the lowest?

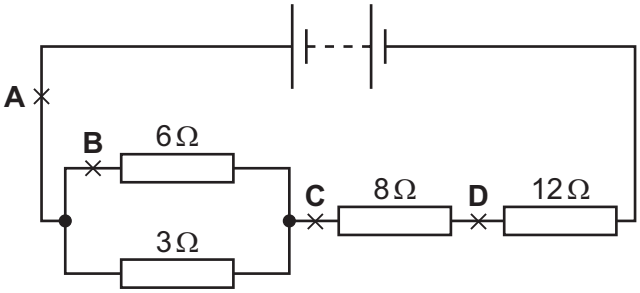

31 The circuit shown can be completed by inserting components at X and at Y.

The completed circuit is a potential divider in which the potential difference (p.d.) across component Y increases when the temperature increases.

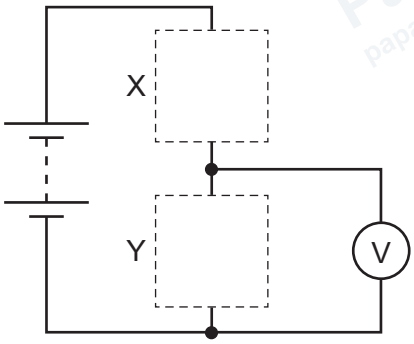

Which row shows the components X and Y?

	X	Y
A	light-dependent resistor	resistor
B	resistor	light-dependent resistor
C	resistor	thermistor
D	thermistor	resistor

© Cambridge University Press & Assessment 2026

PapaCambridge · papacambridge.com

32 A student investigates the magnetic field caused by a current of 2 A in a straight wire.

The student measures the magnetic field strength at different distances from the straight wire.

The student then repeats the experiment using a current of 4 A in the same wire.

Which graph represents the pattern in the student's data?

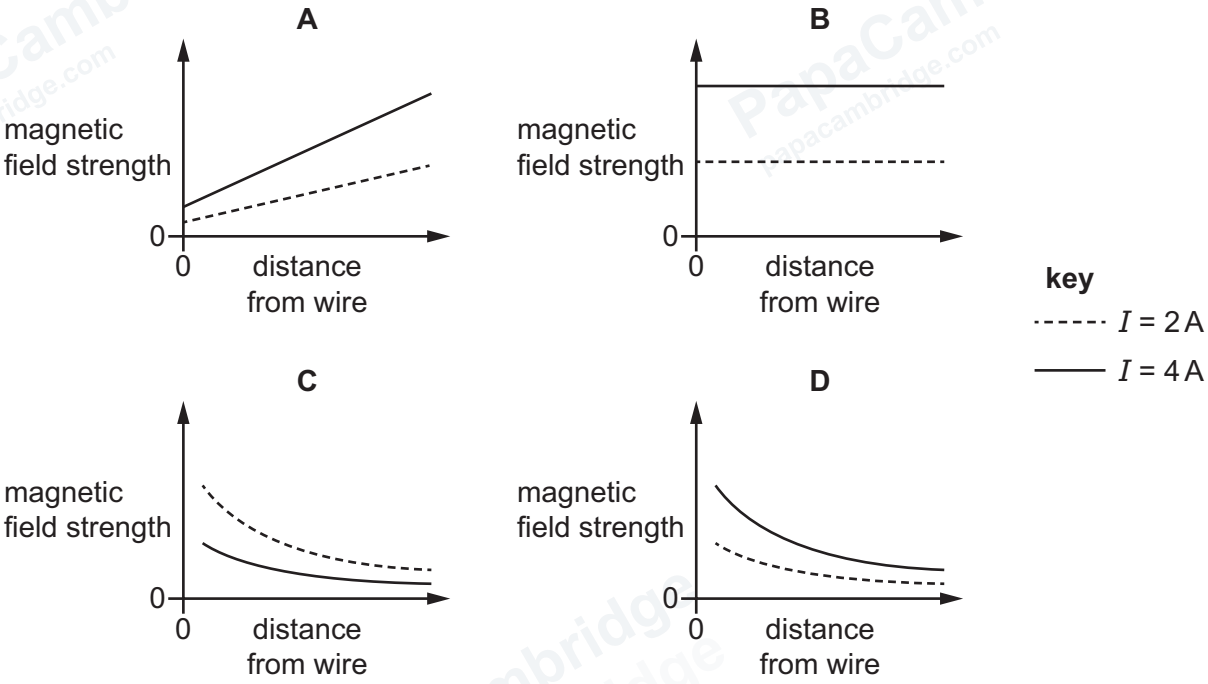

33 Which feature is **not** part of a d.c. motor?

A a coil of wire

B a pair of slip rings

C a magnetic field

D a split-ring commutator

© Cambridge University Press & Assessment 2026

PapaCambridge · papacambridge.com

34 When a beam of positively charged alpha particles is directed towards a thin sheet of gold in a vacuum, the following observations are made.

1 Most of the alpha particles pass straight through the sheet of gold.

2 A small number of alpha particles are deflected through angles greater than 4°.

Which row links each observation to its appropriate conclusion?

	observation 1	**observation 2**
A	The atom consists mainly of empty space.	The negative charge is concentrated at the centre of the atom.
B	The atom consists mainly of empty space.	The positive charge is concentrated at the centre of the atom.
C	The negative charge is concentrated at the centre of the atom.	The atom consists mainly of empty space.
D	The positive charge is concentrated at the centre of the atom.	The atom consists mainly of empty space.

35 In which process does a large nucleus split into two smaller nuclei, each about half the size of the original nucleus?

A alpha-particle scattering

B nuclear fission

C nuclear fusion

D radioactive decay

36 The diagram shows a beam of beta particles entering a magnetic field. The direction of the magnetic field is into the page.

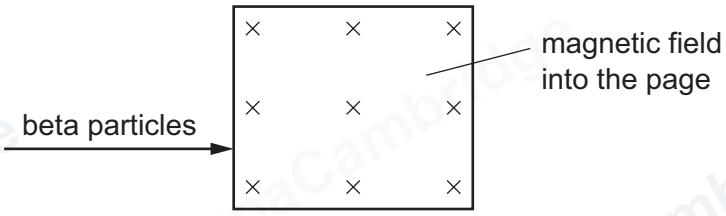

In which direction is the beam of beta particles deflected?

A downwards towards the bottom of the page

B into the page

C out of the page

D upwards towards the top of the page

PapaCambridge · papacambridge.com 0972/21 Question Paper June 2026

37 The equation shows the decay of radon to form polonium.

$$^{222}_{86}\text{Rn} \rightarrow {}^{218}_{84}\text{Po} + \text{X}$$

What is X?

A an α-particle

B a β-particle

C a neutron

D a proton

38 A student is doing an experiment with radioactive materials.

Which piece of advice is **not** useful?

A Do **not** spend too long doing the experiment.

B Keep any material **not** being used at a distance.

C Take frequent sips of water.

D Wear gloves.

39 The planet Mercury orbits the Sun at an average distance of 5.8×10^{10} m from the Sun. Mercury takes 88 days to orbit the Sun.

What is Mercury's average orbital speed?

A 2.1×10^{-5} m/s

B 7600 m/s

C 48 000 m/s

D 2.8×10^{18} m/s

40 In approximately five billion years, our Sun will run out of hydrogen fuel in its core.

Which row shows two later stages in its life cycle?

	next stage	final stage
A	supernova	white dwarf
B	supernova	neutron star
C	red giant	white dwarf
D	red giant	neutron star

© Cambridge University Press & Assessment 2026

PapaCambridge · papacambridge.com

BLANK PAGE

© Cambridge University Press & Assessment 2026

PapaCambridge · papacambridge.com

BLANK PAGE

Permission to reproduce items where third-party owned material protected by copyright is included has been sought and cleared where possible. Every reasonable effort has been made by the publisher (Cambridge University Press & Assessment) to trace copyright holders, but if any items requiring clearance have unwittingly been included, the publisher will be pleased to make amends at the earliest possible opportunity.

To avoid the issue of disclosure of answer-related information to candidates, all copyright acknowledgements are reproduced online in our Copyright Acknowledgements Booklet. This is produced for each series of examinations and is freely available to download at www.cambridgeinternational.org after the live examination series.

Cambridge International Education is the name of our awarding body and a part of Cambridge University Press & Assessment, which is a department of the University of Cambridge.

© Cambridge University Press & Assessment 2026 0972/21/M/J/26