CAMBRIDGE
International Education

Cambridge International AS & A Level

CANDIDATE NAME

CENTRE NUMBER

CANDIDATE NUMBER

DESIGN & TECHNOLOGY **9705/11**

Paper 1 AS Level Written Paper **May/June 2026**

2 hours 15 minutes

You must answer on the question paper.

You will need: Standard drawing equipment
Coloured pencils
Calculator

INSTRUCTIONS

- Answer **all** questions.
- Use a black or dark blue pen.
- Write your name, centre number and candidate number in the boxes at the top of the page.
- Write your answer to each question in the space provided.
- Do **not** use an erasable pen. Do **not** use correction fluid or tape.
- Do **not** write on any bar codes.
- You may use a pencil or coloured pencils for any sketches, drawings or rough working.

INFORMATION

- The total mark for this paper is 100.
- The number of marks for each question or part question is shown in brackets [ ].
- All dimensions are in millimetres, unless otherwise stated.

This document has **20** pages. Any blank pages are indicated.

DC (LO) 369772
© Cambridge University Press & Assessment 2026

[Turn over

PapaCambridge · papacambridge.com 9705/11 Question Paper June 2026

Answer **all** questions.

1 Figure 1.1 shows a baby feeding spoon and its packaging.

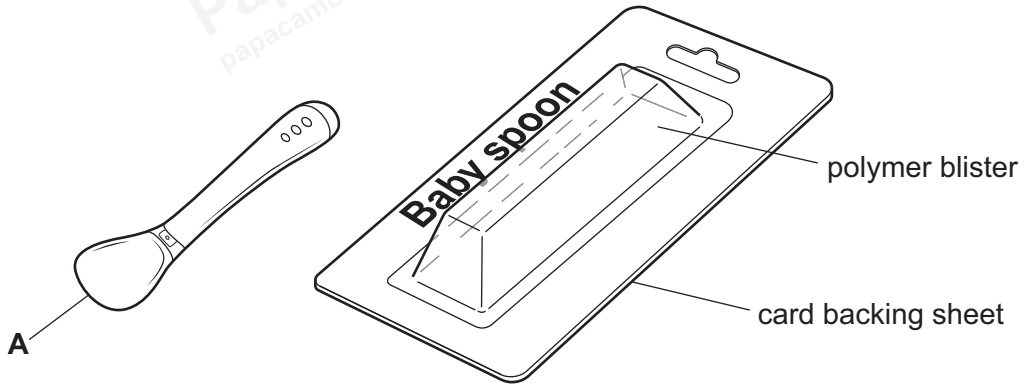

Figure 1.1

(a) **(i)** Name **one** manufacturing process that could be used to make the polymer blister.

..... [1]

(ii) Name **one** smart material that could be used to make part **A** of the spoon change colour when in contact with warm food.

..... [1]

(iii) Describe **one** way in which the designer of the baby feeding spoon has considered ergonomics.

.....

.....

..... [2]

(b) **(i)** Explain **one** reason why ultraviolet (UV) spot varnishing would be used on the printed design on the card backing sheet.

.....

.....

..... [2]

(ii) Explain **one** way the designer of the packaging for the baby feeding spoon has considered sustainability.

.....

.....

..... [2]

© Cambridge University Press & Assessment 2026

DO NOT WRITE IN THIS MARGIN

PapaCambridge · papacambridge.com

2 **(a)** Figure 2.1 shows an incomplete Gantt chart for making a pop-up card.

A	1 hour	2 hours	1 hour	2 hours	3 hours
1					
2					
3					
4					
5					

Figure 2.1

(i) State the column heading that is missing at **A** and give an example of the information that would be added to row 1 of the Gantt chart.

column heading .....

example .....

.....
[2]

(ii) Explain **one** reason for using a flowchart for planning, rather than a Gantt chart.

.....

.....

.....

..... [2]

(b) Explain **two** advantages of producing an accurate materials list or cutting list before the manufacture of a product begins.

1 .....

.....

.....

.....

2 .....

.....

.....

.....
[4]

DO NOT WRITE IN THIS MARGIN

PapaCambridge · papacambridge.com 9705/11 Question Paper June 2026

3 Figure 3.1 shows details of a coffee table.

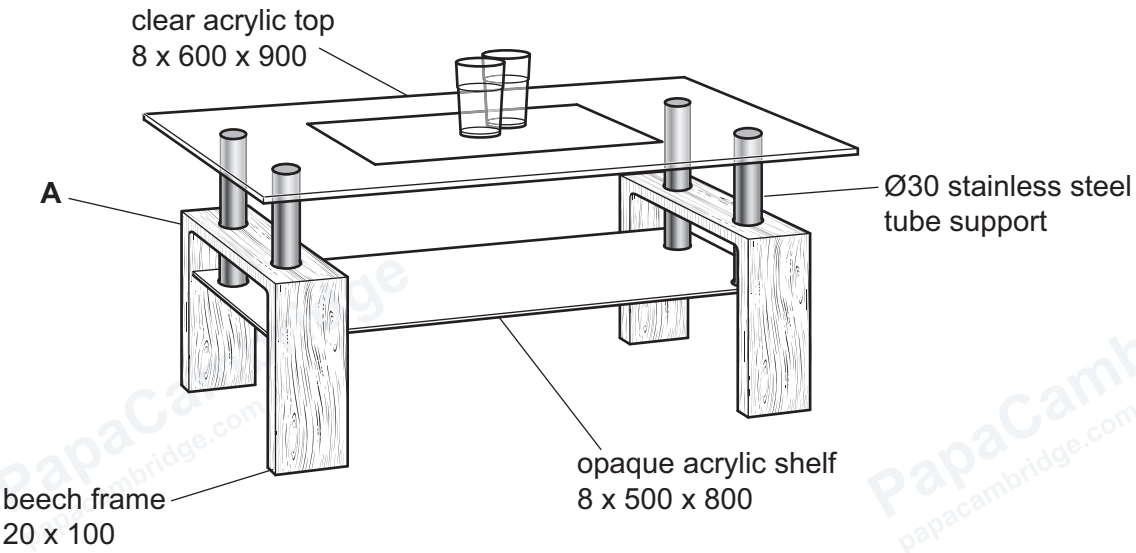

Figure 3.1

(a) Explain why the following material properties would have been considered when selecting materials for the coffee table.

(i) dimensional stability

.....

.....

.....

..... [2]

(ii) corrosion resistance

.....

.....

.....

..... [2]

© Cambridge University Press & Assessment 2026

DO NOT WRITE IN THIS MARGIN

PapaCambridge · papacambridge.com

(b) Use sketches and notes to show:

(i) a **temporary** method of joining the beech frame at corner **A**

[4]

(ii) a **temporary** method of joining the opaque acrylic shelf to one Ø30 stainless steel tube support.

[4]

DO NOT WRITE IN THIS MARGIN

PapaCambridge papacambridge.com

PapaCambridge · papacambridge.com 9705/11 Question Paper June 2026

(c) Identify a suitable finish for the beech frame.
Justify your choice of finish.

finish .....

justification .....

.....

.....

.....

.....

.....

.....

.....

[4]

(d) Explain **two** ways that the construction of the coffee table shown in Figure 3.1 has been designed to have minimum impact on the environment.

1 .....

.....

.....

.....

2 .....

.....

.....

.....

[4]

DO NOT WRITE IN THIS MARGIN

PapaCambridge · papacambridge.com 9705/11 Question Paper June 2026

4 Figure 4.1 shows a design for a development (net) that is to be used to make a package for a sandwich.

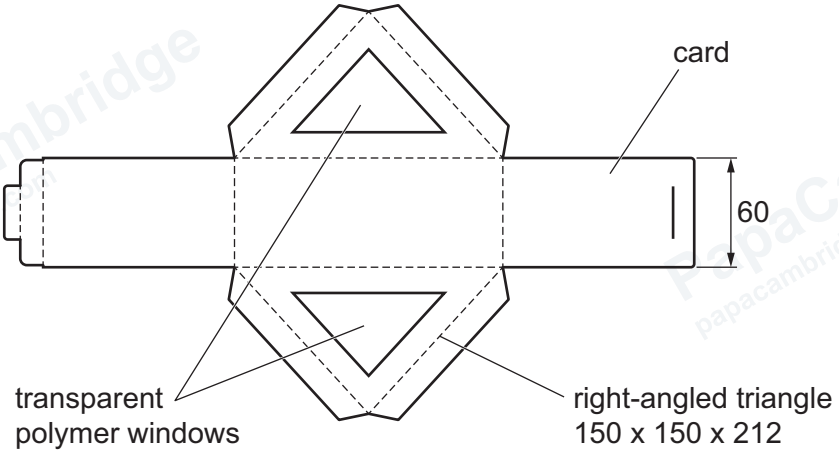

Figure 4.1

(a) Sketch in proportion a three-dimensional (3D) view of the fully assembled package for a sandwich. Use an enhancement technique to show that the windows are made from a transparent polymer.

[8]

DO NOT WRITE IN THIS MARGIN

PapaCambridge papacambridge.com

PapaCambridge · papacambridge.com 9705/11 Question Paper June 2026

(b) Use sketches and notes to show a method of making and assembling the package for a sandwich shown in Figure 4.1. Include the method of attaching the transparent polymer windows.

In your response, you should give details of any tools, equipment and processes involved and safety precautions undertaken.

Use the space on the next page to continue your response.

DO NOT WRITE IN THIS MARGIN

PapaCambridge · papacambridge.com 9705/11 Question Paper June 2026

[8]

DO NOT WRITE IN THIS MARGIN
DO NOT WRITE IN THIS MARGIN
DO NOT WRITE IN THIS MARGIN
DO NOT WRITE IN THIS MARGIN
DO NOT WRITE IN THIS MARGIN

PapaCambridge papacambridge.com

PapaCambridge · papacambridge.com 9705/11 Question Paper June 2026

(c) Surface graphics are to be added to the development (net) shown in Figure 4.1.

Explain how the designer may have considered the following when designing the surface graphics. Give **one** example for each.

(i) safety of the user

.....

.....

.....

..... [2]

(ii) customer needs

.....

.....

.....

..... [2]

© Cambridge University Press & Assessment 2026

DO NOT WRITE IN THIS MARGIN

PapaCambridge · papacambridge.com

DO NOT WRITE IN THIS MARGIN

Turn over

PapaCambridge · papacambridge.com 9705/11 Question Paper June 2026

5 Figure 5.1 shows an exercise bicycle.

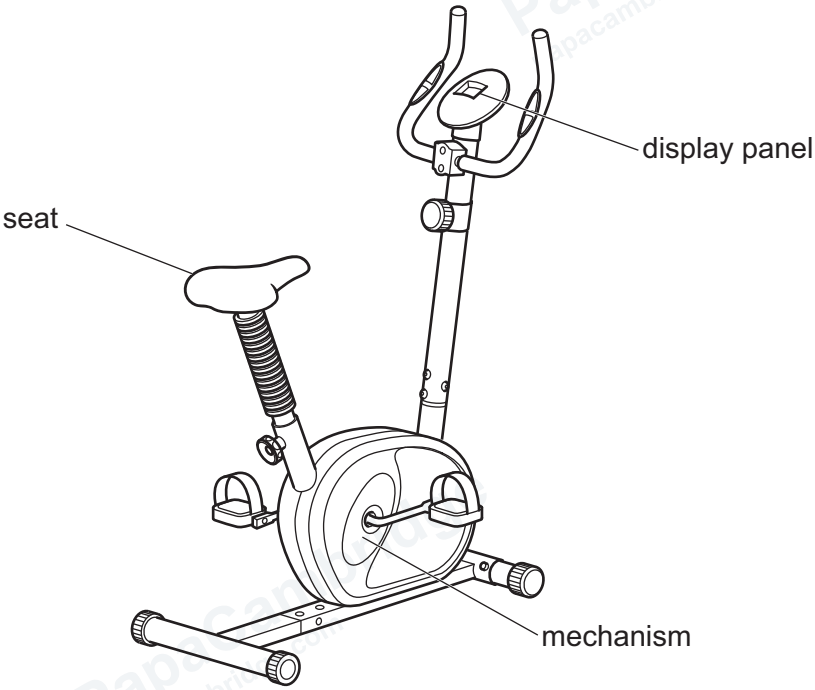

Figure 5.1

(a) Explain why the exercise bicycle has:

(i) a cover over the mechanism

.....

.....

.....

..... [2]

(ii) a height adjustable seat

.....

.....

.....

..... [2]

(iii) a display panel.

.....

.....

.....

..... [2]

© Cambridge University Press & Assessment 2026

DO NOT WRITE IN THIS MARGIN

PapaCambridge · papacambridge.com 9705/11 Question Paper June 2026

(b) Complete Table 5.1 to show the name, symbol and function of **three** electronic components that are used in the display panel on the exercise bicycle.

Table 5.1

name	symbol	function
.....	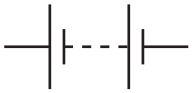	To provide a power source for the display.
SPST switch		....
Light emitting diode (LED)		To convert electrical energy into light.

[4]

(c) Explain **two** ways of reducing reliance on fossil fuels as a source of energy during the manufacture of the exercise bicycle.

1 .....

.....

.....

.....

2 .....

.....

.....

.....

[4]

DO NOT WRITE IN THIS MARGIN

PapaCambridge papacambridge.com

PapaCambridge · papacambridge.com 9705/11 Question Paper June 2026

(d) Exercise machines transmit and convert motion through simple mechanisms. Use sketches and notes to show an example of:

(i) a motion transmission mechanism

[3]

(ii) a motion conversion mechanism.

[3]

© Cambridge University Press & Assessment 2026

DO NOT WRITE IN THIS MARGIN

PapaCambridge papacambridge.com

DO NOT WRITE IN THIS MARGIN

Turn over

PapaCambridge · papacambridge.com 9705/11 Question Paper June 2026

6 Figure 6.1 shows a storage system that has been modified, by adding cartoon characters, so that it appeals to young children.

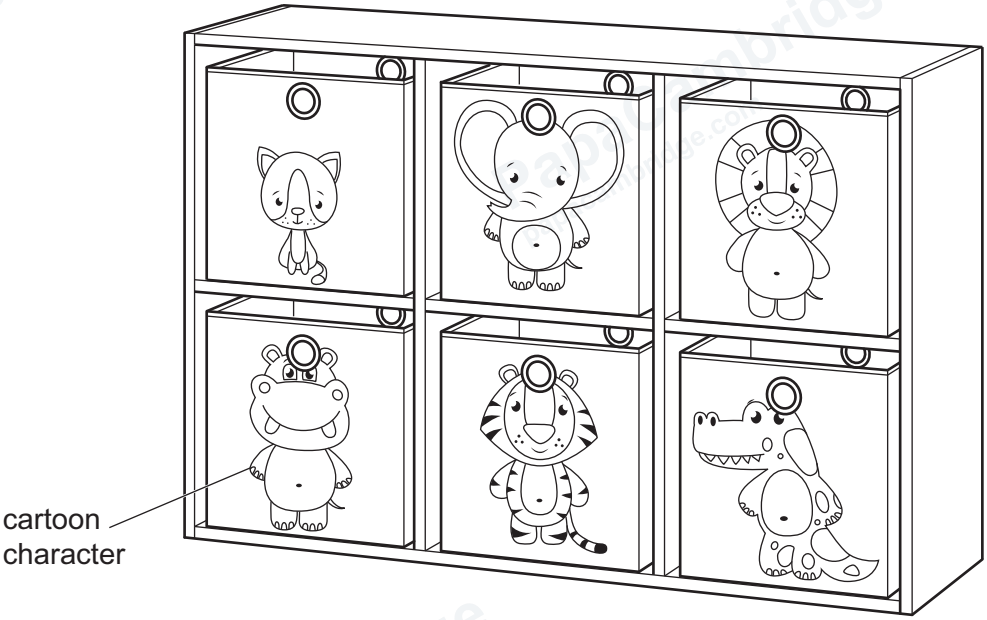

Figure 6.1

Use sketches and notes to show how the design of **one** other product could be modified to make it more appealing to a different specific age group.

Your answer should:

- identify the product you propose to modify and a specific age group
- use sketches and notes, including appropriate conventions and specialist vocabulary, to show how you propose to modify the product to make it appealing to the specific age group
- include an analysis of how the modification meets the needs of the specific age group.

Use the space on the next page to continue your response.

DO NOT WRITE IN THIS MARGIN

PapaCambridge · papacambridge.com 9705/11 Question Paper June 2026

[12]

DO NOT WRITE IN THIS MARGIN
DO NOT WRITE IN THIS MARGIN
DO NOT WRITE IN THIS MARGIN
DO NOT WRITE IN THIS MARGIN
DO NOT WRITE IN THIS MARGIN

PapaCambridge papacambridge.com

PapaCambridge · papacambridge.com 9705/11 Question Paper June 2026

7 Figure 7.1 shows a pair of door hinges and screws that are standardised components in the furniture-making industry.

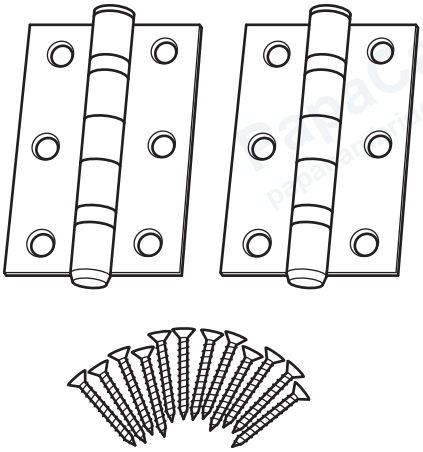

Figure 7.1

Discuss how the use of standardised components has impacted on the development of products.

Your answer should:

- include examples of standardised components
- evaluate the impact the use of standardised components has had on the development of specific products
- discuss the impact the use of standardised components has had on the wider issues in design and technology (including cultural, economic, environmental and social factors).

.....

.....

.....

.....

.....

.....

.....

.....

.....

.....

.....

.....

.....

© Cambridge University Press & Assessment 2026

DO NOT WRITE IN THIS MARGIN

PapaCambridge · papacambridge.com

[12]

© Cambridge University Press & Assessment 2026

DO NOT WRITE IN THIS MARGIN

PapaCambridge papacambridge.com

BLANK PAGE

Permission to reproduce items where third-party owned material protected by copyright is included has been sought and cleared where possible. Every reasonable effort has been made by the publisher (Cambridge University Press & Assessment) to trace copyright holders, but if any items requiring clearance have unwittingly been included, the publisher will be pleased to make amends at the earliest possible opportunity.

To avoid the issue of disclosure of answer-related information to candidates, all copyright acknowledgements are reproduced online in our Copyright Acknowledgements Booklet. This is produced for each series of examinations and is freely available to download at www.cambridgeinternational.org after the live examination series.

Cambridge International Education is the name of our awarding body and a part of Cambridge University Press & Assessment, which is a department of the University of Cambridge.

© Cambridge University Press & Assessment 2026 9705/11/M/J/26

DO NOT WRITE IN THIS MARGIN